6.2. Ručni paletni viljuškar

Viljuške za prenos tereta samobalansirajuće MB

Automatic crane fork with self levelling ends MB type

2.1 2.2 CE

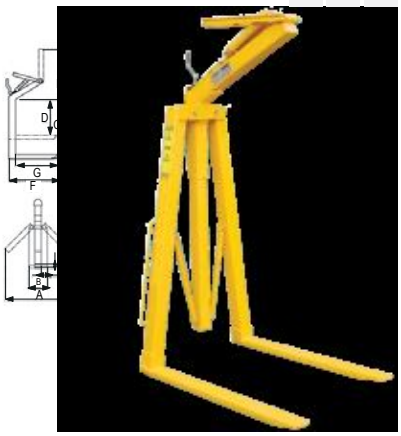

Model	Nosivost (kg)	A (mm)	B (mm)	C* (mm)	D (mm)	E (mm)	F (mm)	G (mm)	L (mm)	M (mm)	Težina (kg)
	Capacity										Weight
MBA-06A	600	1600	340	1300	1200	2360	1080	1000	25	80	95
MBA-10A	1000	1600	340	1300	1200	2360	1080	1000	25	90	120
MBA-15A	1500	1600	340	1300	1200	2360	1080	1000	30	90	130
MBA-20A	2000	1600	340	1300	1200	2360	1080	1000	35	100	150
MBA-25A	2500	1600	340	1300	1200	2360	1090	1000	35	120	180
MBA-30A	3000	1600	340	1300	1200	2360	1090	1000	35	120	185

Model	Nosivost (kg)	A (mm)	B (mm)	C* (mm)	D (mm)	E (mm)	F (mm)	G (mm)	L (mm)	M (mm)	Težina (kg)
	Capacity										Weight
MB-06	600	1400	340	1100	1000	2140	1080	1000	25	80	85
MB-10	1000	1400	340	1100	1000	2140	1080	1000	25	90	110
MB-15	1500	1400	340	1100	1000	2140	1080	1000	30	90	120
MB-20	2000	1400	340	1100	1000	2140	1080	1000	35	100	136

• EN 13155

Viljuške za prenos tereta teleskopske samobalansirajuće MBRA

Telescopic self levelling crane fork MBRA type

2.1 2.2 CE

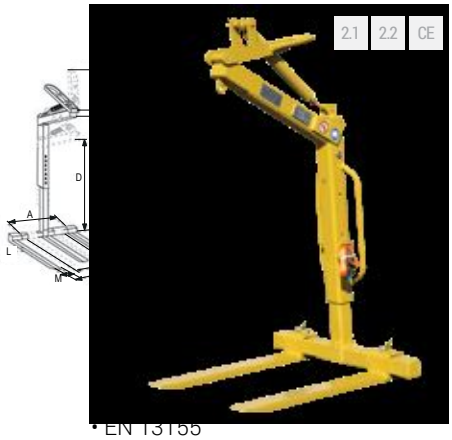

Model	Nosivost (kg)	A (mm)	B (mm)	C* (mm)	D (mm)	E (mm)	F (mm)	G (mm)	L (mm)	M (mm)	Težina (kg)
	Capacity										Weight
MBRA-10	1000	1000	1000	300	1000	1450	700	1000	25	90	131
MBRA-15	1500	1000	1000	300	1000	1600	700	1000	30	90	155
MBRA-20	2000	1000	1000	300	1200	1800	700	1000	35	100	170
MBRA-25	2500	1000	1000	300	1200	1800	700	1000	35	120	240
MBRA-30	3000	1000	1000	300	1200	1800	700	1000	35	120	250

• EN 13155

Viljuške za prenos tereta teleskopske samobalansirajuće MBR

Telescopic self levelling crane fork MBR type

2.1 2.2 CE



Model	Nosivost (kg)	A (mm)	B (mm)	C* (mm)	D (mm)	E (mm)	F (mm)	G (mm)	L (mm)	M (mm)	Težina (kg)
	Capacity										Weight
MBR-10	1000	1000	1000	300	1000	1450	450	1000	25	90	110
MBR-15	1500	1000	1000	300	1000	1600	450	1000	35	90	145
MBR-20	2000	1000	1000	300	1200	1800	450	1000	35	100	160
MBR-25	2500	1000	1000	300	1200	1800	450	1000	35	120	215
MBR-30	3000	1000	1000	300	1200	1800	450	1000	35	120	225